Potain Igo T 130

Product Guide

Features

- 8000 kg (17,637 lb) maximum capacity
- 1400 kg (3086 lb) capacity at 50 m (164 ft)
- 50 m (164 ft) maximum operating hook radius
- 37,3 m (122 ft) maximum tip hook height with jib horizontal
- 61 m (200 ft) maximum hook height with 50 m (164 ft) jib set at 30°
- Variable height lattice mast from 19,3 m (63 ft) to 37,3 m (122 ft) with optional mast inserts

EN 14439 C25-D25
EN 14439 C50-D50
FEM 1.001-A3

Features

Mast inserts

Increase your working height by up to 15 m (49 ft) with optional mast inserts. Each insert is 6 m (20 ft) and provides the operator with additional heights under hook.

Cab

Two cab options are available for the Igo T 130: the Ultra View cab is equipped with integrated controls and provides maximum operator comforts; the Cab 800 provides operators with an areal view and offers basic comforts.

SmartCom technology

SmartCom is an embedded control system in CAN bus network which is based on a man to machine interface located in the control panel. This electronic system offers various functionalities which make putting the crane into service, as well as controlling the safety devices, faster and easier and makes crane maintenance easier than ever.

UL/CSA listed components

The Igo T 130 is equipped with UL/CSA listed components in the main electrical panel for the North American market.

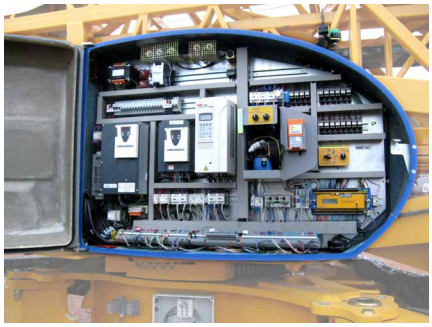

Central lubrication

Prolong the life of the slewing ring with our automated lubrication system. This centralized system allows the technician to program a specific grease application from a large reservoir ensuring the proper slewing ring gear and bearing lubrication on the job site.

Contents

Specifications	4
Transport	5
Weights	6
Dimensions	7
Crane profile	8
Load charts	9
Mechanisms	10
Metric dimension	11
Metric crane profile	12
Metric load charts	13
Metric mechanisms	14
Symbols glossary	15

Specifications

Jib

47 m (154 ft) radius standard offsettable lattice jib; 50 m (164 ft) radius jib is optional. Jib can be offset to 30˚. Opening and aligning are carried out automatically by four hydraulic cylinders.

Mast

Telescoping lattice mast raised by an uaxiliary winch and pulley block. Hook heights of 19,3 m (63 ft) and 22,3 m (73 ft) achievable with standard mast. 360˚ rotation possible during raising sequence.

*Optional mast inserts

Three (3) 6 m (20 ft) mast inserts available to reach a maximum horizontal hook height of 37,3 m (122 ft). Increasing mast height with one insert provides hook heights of 25,3 m (83 ft) and 28,3 m (93 ft); second mast insert provides hook heights of 31,3 m (103 ft) and 34,3 m (113 ft); third mast insert provides a hook height of 37,3 m (122 ft).

Chassis

Outriggers swing and lock into position. 5 m (16.4 ft) square outrigger spread with 4 m (13.1 ft) maximum turning radius. 600 mm (23.6 in) square outrigger pads are stowed on the crane during transport.

*Ballast

Ballast requirement for the crane consists of, at minimum, eleven (11) slabs each weighing 4050 kg (8929 lb). An additional slab is required in some raised jib configurations. Maximum counterweight is permissible in all configurations except when forbidden, please consult the crane's manual for details.

Electrical requirement

480 volt, 60 Hz measured at the turntable. Power Control allows for a reduction in power supply for a proportional reduction in hoisting speed. Earth rod and electric cable stored on the crane during transport.

Reeving

SM/DM block for 2 (SM) or 4-part line (DM). Manual removal of one pin to change between SM and DM.

Anemometer

Electronic wind speed meter to alert the operator of wind speed conditions. Provides selective display on the radio remote. Maximum in service wind speed is 72 km/h (45 mph) and maximum out service wind speed is 150 km/h (93 mph).

Controls

Wireless remote control provides information to the operator about wind speed, radius, hook height, load, and moment. Lights and buzzers alert the operator when nearing limits of operation. Battery charger and extra battery are provided with crane.

Auxiliary push button tethered remote ensures continual operation in case of battery or other malfunction of the wireless remote control. Optional tethered remote control ensures continual operation with same functions and ergonomics as standard wireless remote control.

Swing

RVF 161 Optima+ slewing mechanism with maximum swing speed of 0.8 rpm. Progressive control of speed with counter-slewing possible, anti-load swinging system makes aligning the load and jib easier. Multiple rpm speeds possible depending upon parameter selected.

Hoist

33 LVF 20 Optima: 29.5 HP variable frequency hoist with 2 t (2.2 USt) line pull. Progressive speed change according to the accelerating or decelerating ramps. Optima allows the hoist to adapt its speed to the weight of the load.

Trolley

5 DVF 5: 5.4 HP variable frequency hoist with 500 kg (1102 lb) line pull. Progressive speed change according to acceleration or deceleration ramps controlled by the frequency converter.

Hydraulic equipment

Hydraulic cylinders are used for unfolding the mast and jib. All actions are carried about by the remote control.

*Optional transport axle sets

Axle sets are available for both jobsite and highway applications. Jobsite axles are rated for 25 km/h (15.5 mph) and highway axles are rated for 80 km/h (50 mph).

*Optional equipment

* STANDARD NORTH AMERICAN SPECIFICATION: includes 164 ft (50 m) jib radius, offsettable jib, pre-equipment for interference system, Top Zone, 3 mast inserts, 12 counterweight slabs and central lubrication.
* Offsetable jib
* Mast inserts 6 m (20 ft)
* Electric slip ring
* Central lubrication
* Ultra View cab
* Cab 800
* Cold weather kit
* Top Zone
* Top Tracing II
* Transport axles and kits

**Denotes optional equipment*
***Requires optional anemometer*

Transport

SL122/S215M
25 km/h / 15.5 mph

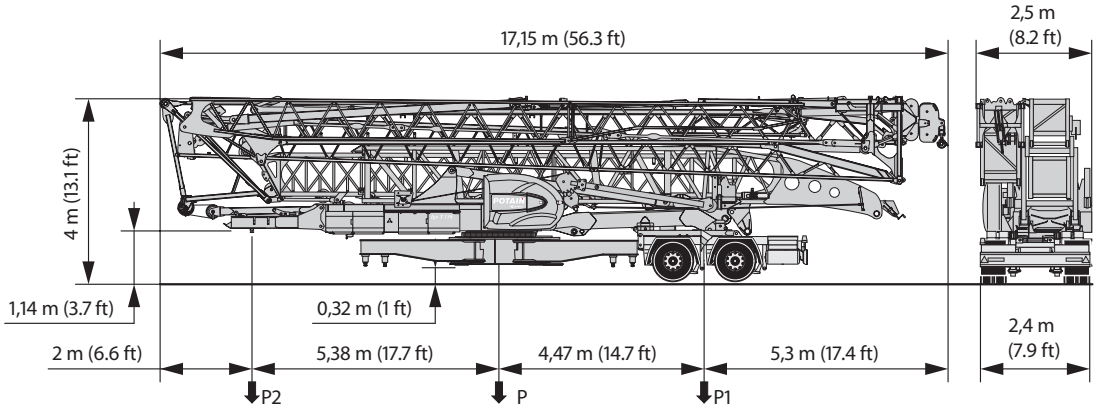

SL122/J215M
80 km/h / 50 mph

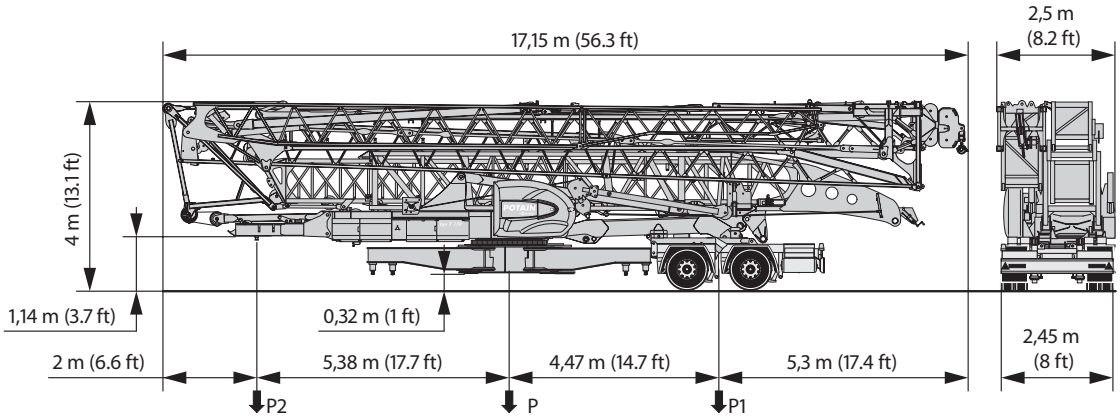

NOTE: Dimensions and weights may vary due to manufacturing tolerances.

Weights

North American Highway Axle

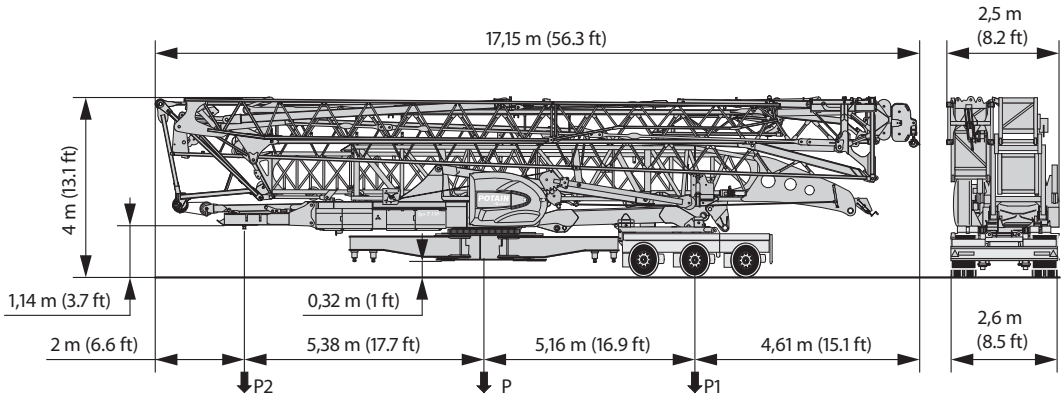

**Other axle sets are available.*

Chassis data (in transort position)

	SL122/S215M 25 km/h (15.5 mph)		SL122/J215M 80 km/h (50 mph)		North American Highway Axle	
	meters	**(feet)**	**meters**	**(feet)**	**meters**	**(feet)**
Overall length	17,15	56.3	17,15	56.3	17.15	56.3
Overall height	4	13.1	4	13.1	4	13.1
Overall width	2,5	8.2	2,5	8.2	2,6	8.5
Overhang	5,3	17.4	5,3	17.4	4,61	15.1

Weights

Crane weight less counterweight:	27 960 kg	61,641 lb
Counterweight for operation (12 slabs):	48 600 kg	107,145 lb
Crane with counterweight:	76 560 kg	168,786 lb

Crane with transport equipment

	SL122/S215M 25 km/h (15.5 mph)		SL122/J215M 80 km/h (50 mph)		North American Highway Axle	
In transport with no counterweight:	**kilograms**	**(pounds)**	**kilograms**	**(pounds)**	**kilograms**	**(pounds)**
Gross (P)	30 100	66,359	30 000	66,139	30 826	67,960
Rear (P1)	19 300	42,549	19 200	42,329	20 112	44,340
Front (P2)	10 800	23,810	10 800	23,810	10 714	23,620

NOTE: Dimensions and weights may vary due to manufacturing tolerances.

Dimensions

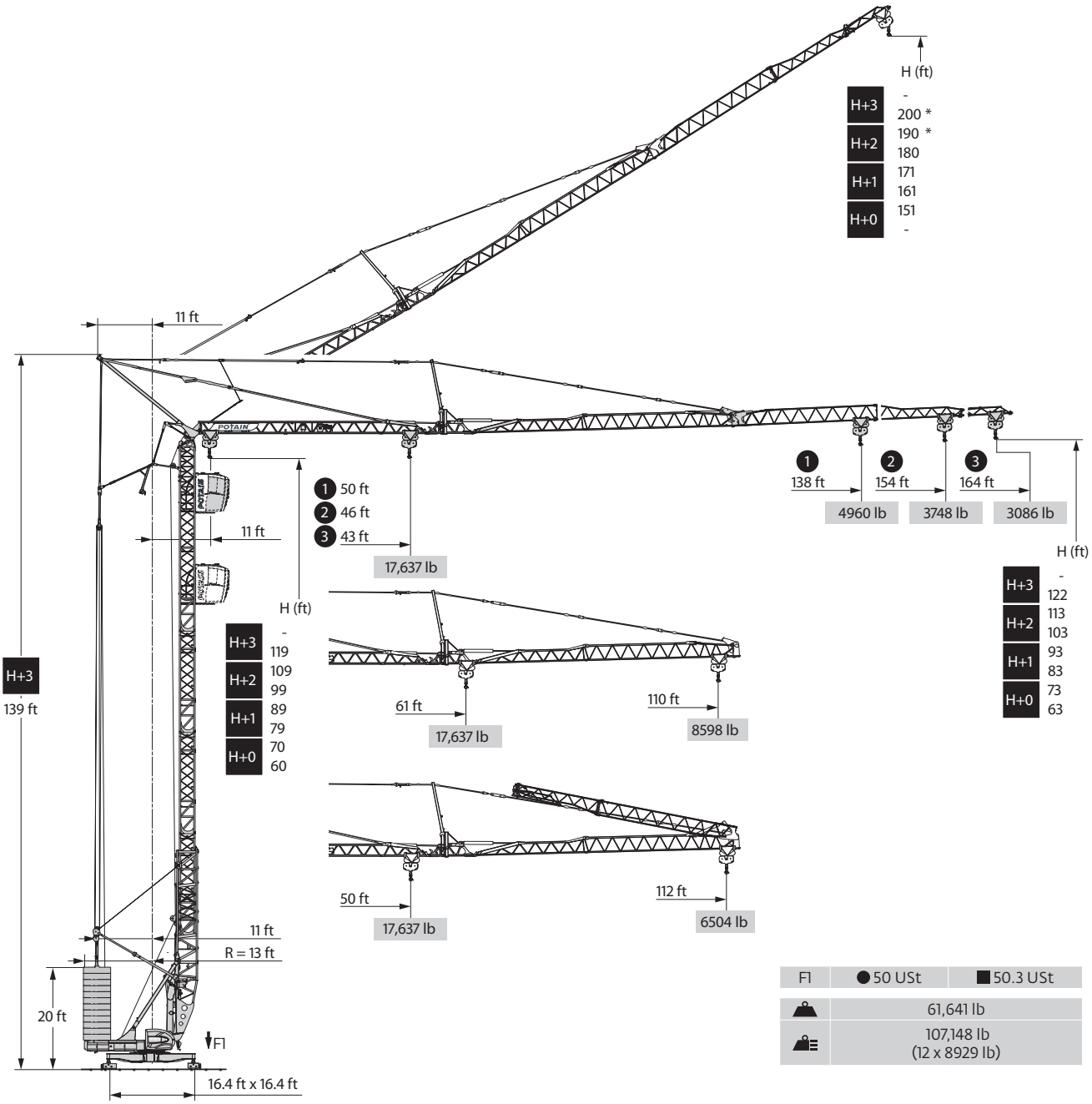

F1	● 50 USt	■ 50.3 USt
	61,641 lb	
	107,148 lb (12 x 8929 lb)	

*For these heights, the load charts are reduced.

Crane profile

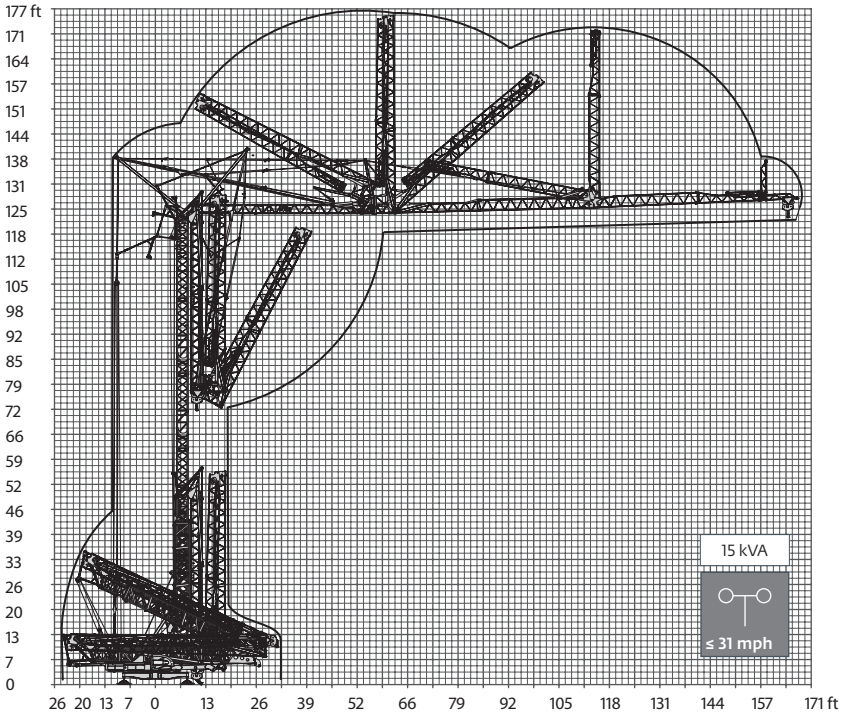

Jib raised 30°

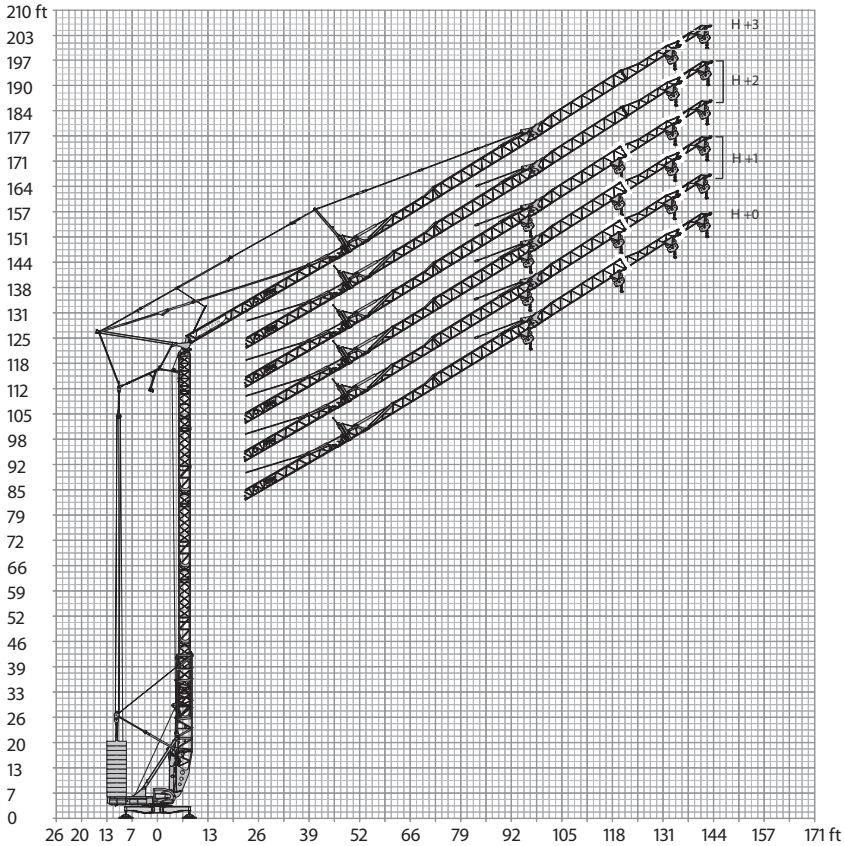

THIS CHART IS ONLY A GUIDE AND SHOULD NOT BE USED TO OPERATE THE CRANE.
The individual crane's load chart, operating instructions and other instructional plates must be read and understood prior to operating the crane.

Load charts

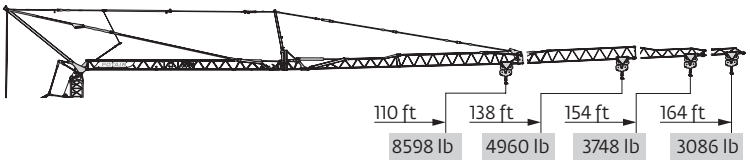

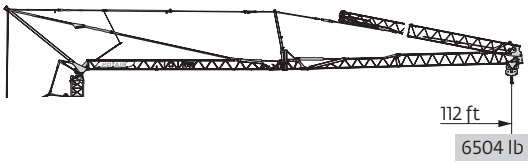

164 ft	11 ►	43	46	52	59	66	72	74	75	79	85	92	98	105	112	118	125	131	138	144	151	157	164	ft	
	17,637	16,314	13,669	11,905	10,362	9259	-	8598	8157	7496	6834	6173	5732	5291	4850	4519	4189	3968	3748	3527	3307	3086	lb		
	8818	8598	8157	7496	6834	6173	5732	5291	4850	4519	4189	3968	3748	3527	3307	3086	lb								

154 ft	11 ►	46	49	52	59	66	72	79	80	82	85	92	98	105	112	118	125	131	138	144	151	154	ft	
	17,637	16,314	14,991	13,007	11,244	10,141	9039	-	8598	8157	7496	6834	6283	5732	5401	4960	4630	4409	4079	3858	3748	lb		
	8818	8598	8157	7496	6834	6283	5732	5401	4960	4630	4409	4079	3858	3748	lb									

138 ft	11 ►	50	52	59	66	72	79	82	85	88	89	92	98	105	112	118	125	131	138	ft
	17,637	16,755	14,330	12,566	11,244	10,141	9480	9039	-	8598	8378	7716	7055	6504	6063	5622	5291	4960	lb	
	8818	8598	8378	7716	7055	6504	6063	5622	5291	4960	lb									

110 ft	11 ►	61	66	72	79	82	85	89	92	98	105	108	110	ft		
	17,637	16,094	14,330	13,007	12,346	11,685	11,244	10,803	9921	9039	-	8598	lb			
	8818	8598	lb													

164 ft																
154 ft	11 ►	50	52	59	66	72	79	85	88	92	98	105	112	ft		
138 ft	17,637	16,755	14,330	12,566	11,244	10,141	9039	-	8378	7716	7055	6504	lb			
	8818	8378	7716	7055	6504	lb										

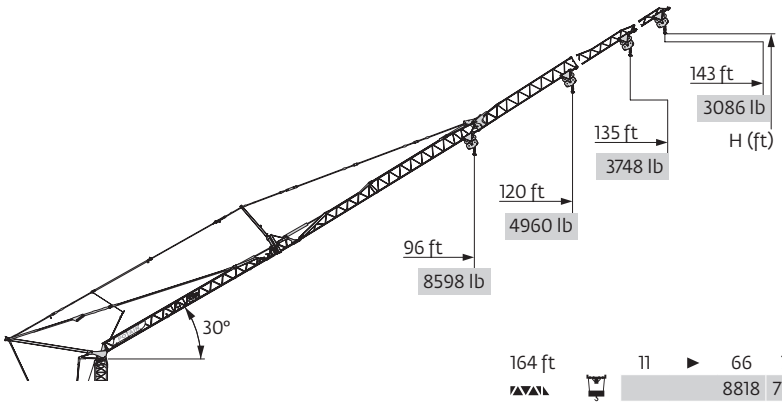

	164 ft	154 ft	138 ft	110 ft
H+2	-	-	-	-
	180	175	166	151
H+1	171	165	156	141
	161	156	147	132
H+0	151	146	137	122

164 ft	11 ►	66	72	79	85	92	98	105	112	118	125	131	138	143	ft	
	8818	7716	7055	6283	5732	5181	4740	4409	4079	3748	3527	3307	3086	lb		

154 ft	11 ►	70	72	79	85	92	98	105	112	118	125	135	ft	
	8818	8598	7716	6834	6283	5732	5291	4850	4519	4189	3748	lb		

138 ft	11 ►	77	85	92	98	105	112	120	ft			
	8818	7716	7055	6504	5952	5512	4960	lb				

110 ft	11 ►	94	96	ft	
	8818	8598	lb		

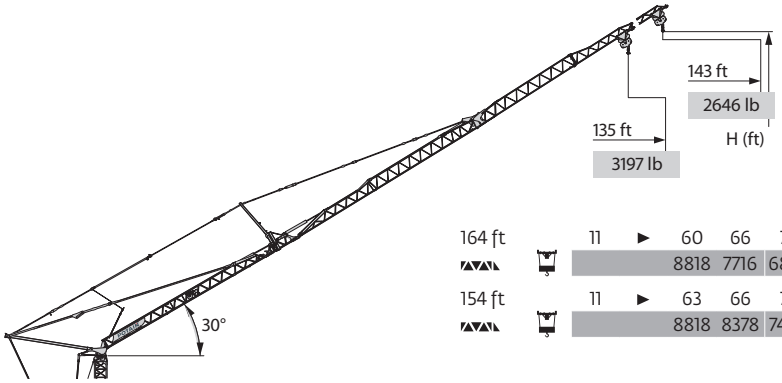

	164 ft	154 ft	138 ft	110 ft
H+3	200	195	-	-
H+2	190	185	-	-
	-	-	-	-

164 ft	11 ►	60	66	72	79	85	92	98	105	112	118	125	131	138	143	ft
	8818	7716	6834	6173	5512	4960	4519	4189	3858	3527	3197	2976	2756	2646	lb	

154 ft	11 ►	63	66	72	79	85	92	98	105	112	118	125	135	ft
	8818	8378	7496	6614	5952	5401	4960	4519	4189	3858	3527	3197	lb	

THIS CHART IS ONLY A GUIDE AND SHOULD NOT BE USED TO OPERATE THE CRANE.
The individual crane's load chart, operating instructions and other instructional plates must be read and understood prior to operating the crane

Mechanisms

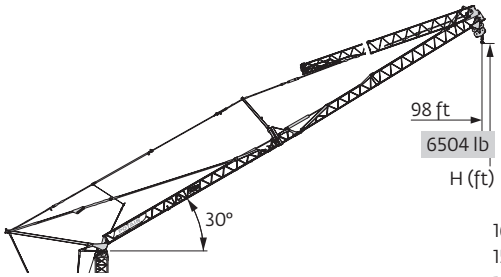

	164 ft
	154 ft
	138 ft
H+2	152
H+1	142
	133
H+0	123

164 ft								
154 ft	11	►	77	79	85	92	98	ft
138 ft			8818	8598	7716	7056	6504	lb

480 V - 60 Hz													hp	kW
	33 LVF 20 Optima	fpm	10	52	112	174	207	5	26	56	87	103	29.5	22
		lb	8818	8818	8818	4409	2205	17,637	17,637	17,637	8818	4409		
	5 DVF 5	m/min	49 - 98 - 180 (8818 → 17,637 lb) 49 - 98 - 230 (1102 → 8818 lb) 49 - 98 - 328 (0 → 1102 lb)										5.4	4
	RVF 161 Optima+	rpm	0 → 0.8										7.5	5.5
	TVF 124	fpm	82										2 x 4	2 x 3

IEC 60204-32	kVA
480 V (+6% -10%) 60 Hz	31 → 19 kVA 35 → 22 kVA

33 LVF 20 Optima

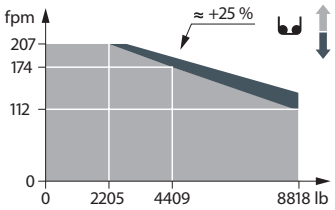

	Hoisting
	Trolleying
	Slewing
	Traveling

THIS CHART IS ONLY A GUIDE AND SHOULD NOT BE USED TO OPERATE THE CRANE.
The individual crane's load chart, operating instructions and other instructional plates must be read and understood prior to operating the crane.

Metric dimensions

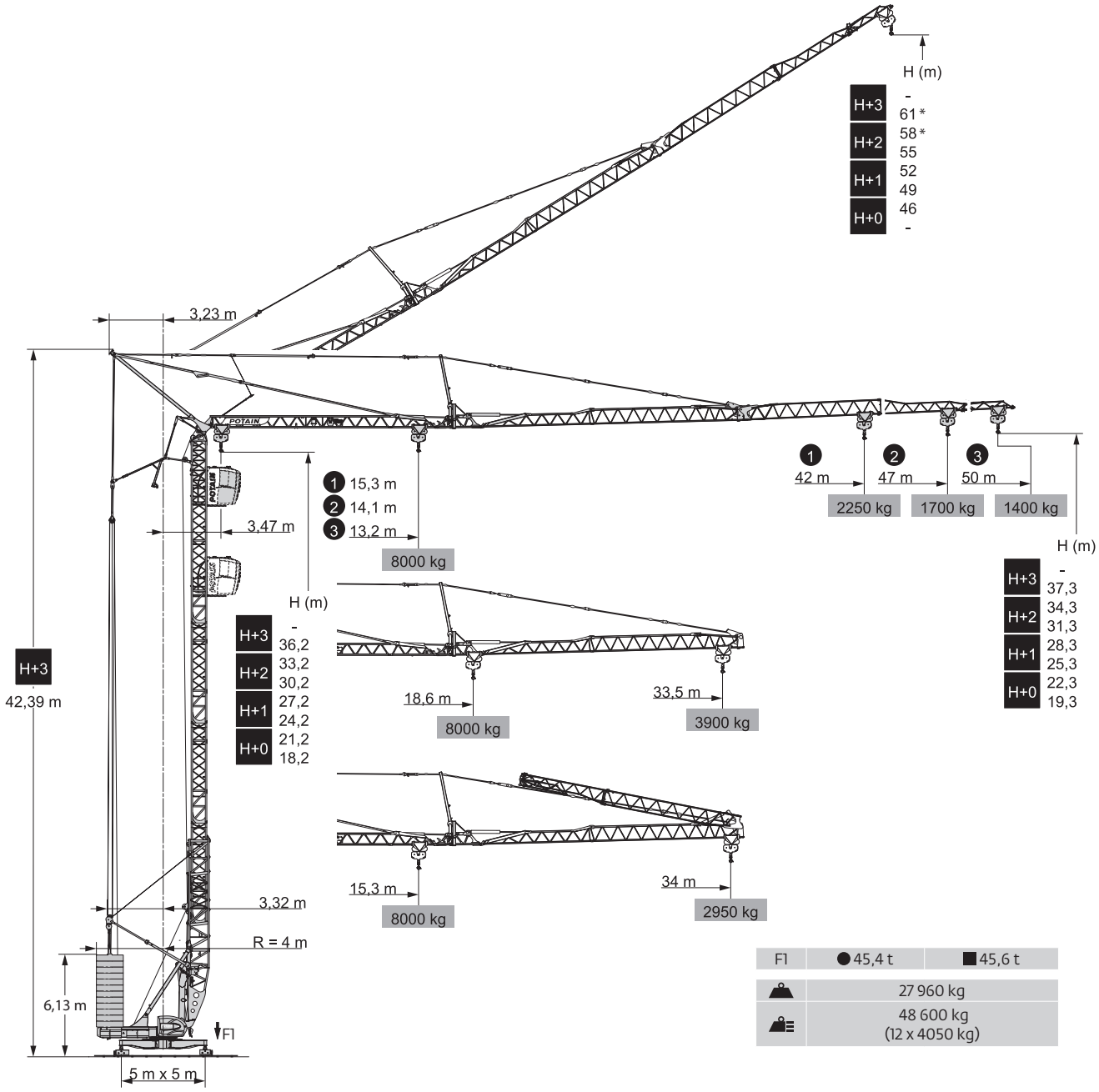

* For these heights, the load charts are reduced.

THIS CHART IS ONLY A GUIDE AND SHOULD NOT BE USED TO OPERATE THE CRANE.
The individual crane's load chart, operating instructions and other instructional plates must be read and understood prior to operating the crane

Metric crane profile

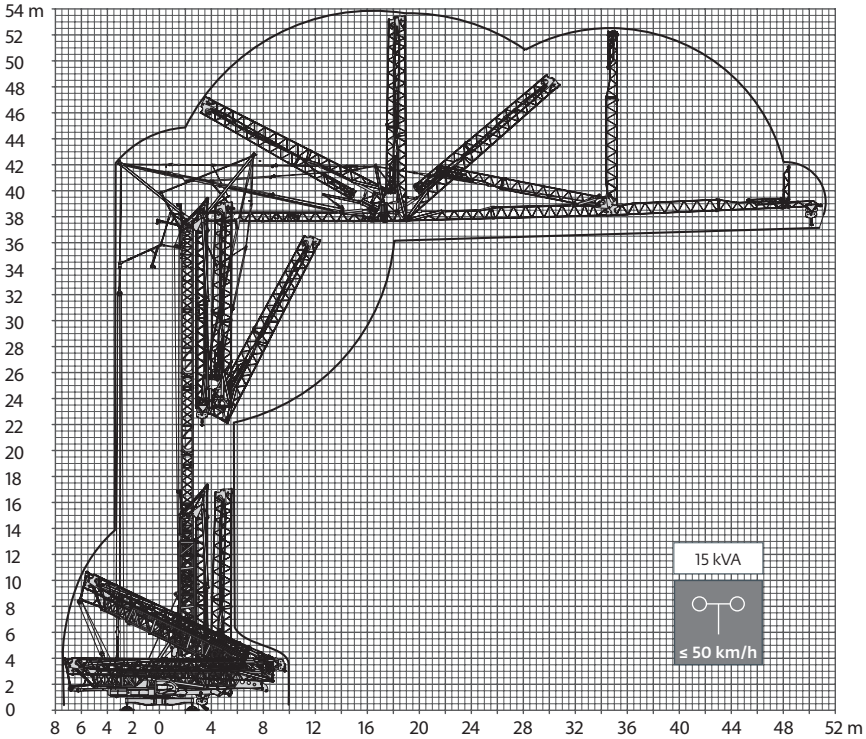

Jib raised 30°

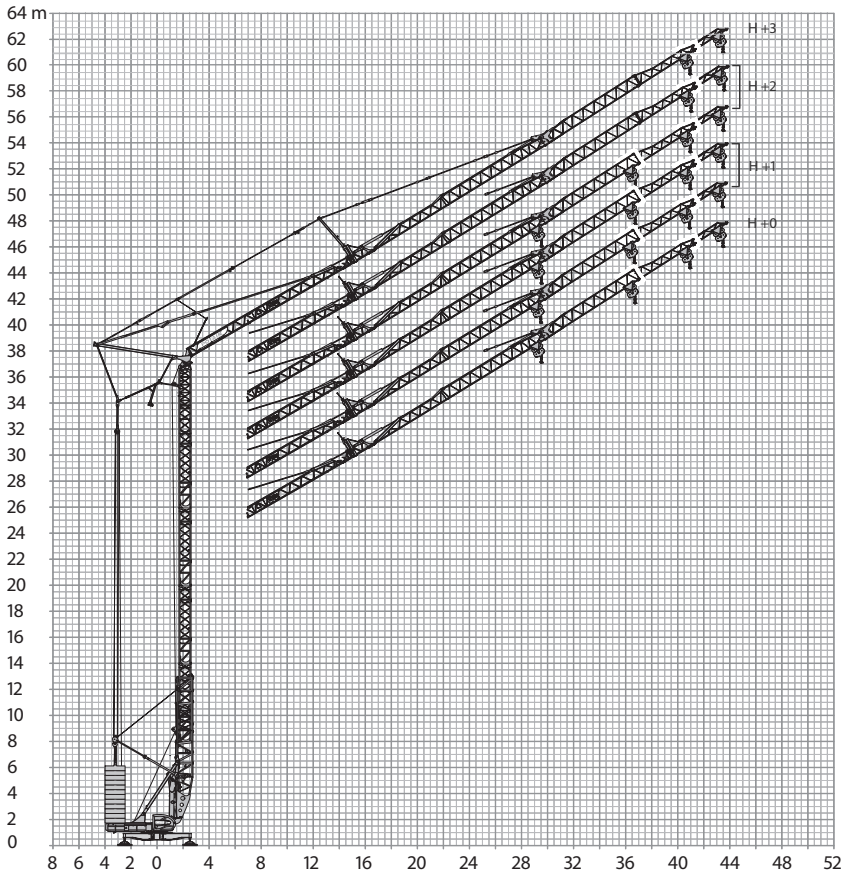

THIS CHART IS ONLY A GUIDE AND SHOULD NOT BE USED TO OPERATE THE CRANE.
The individual crane's load chart, operating instructions and other instructional plates must be read and understood prior to operating the crane.

Metric load charts

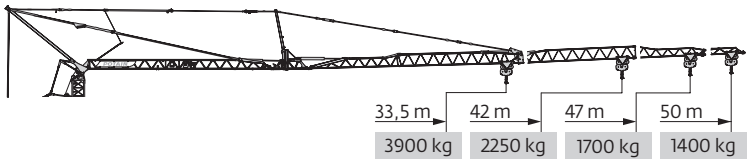

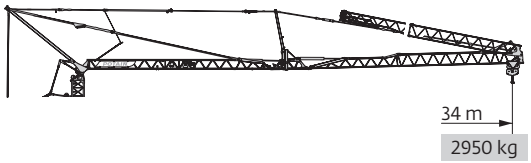

50 m	3,5 ►	13,2	14	16	18	20	22	22,7	23	24	26	28	30	32	34	36	38	40	42	44	46	48	50	m
		8000	7400	6200	5400	4700	4200	-	3900	3700	3400	3100	2800	2600	2400	2200	2050	1900	1800	1700	1600	1500	1400	kg
								4000	3900	3700	3400	3100	2800	2600	2400	2200	2050	1900	1800	1700	1600	1500	1400	kg
47 m	3,5 ►	14,1	15	16	18	20	22	24	24,4	25	26	28	30	32	34	36	38	40	42	44	46	47	m	
		8000	7400	6800	5900	5100	4600	4100	-	3900	3700	3400	3100	2850	2600	2450	2250	2100	2000	1850	1750	1700	kg	
									4000	3900	3700	3400	3100	2850	2600	2450	2250	2100	2000	1850	1750	1700	kg	
42 m	3,5 ►	15,3	16	18	20	22	24	25	26	26,7	27	28	30	32	34	36	38	40	42	m				
		8000	7600	6500	5700	5100	4600	4300	4100	-	3900	3800	3500	3200	2950	2750	2550	2400	2250	kg				
										4000	3900	3800	3500	3200	2950	2750	2550	2400	2250	kg				
33,5 m	3,5 ►	18,6	20	22	24	25	26	27	28	30	32	32,8	33,5	m										
		8000	7300	6500	5900	5600	5300	5100	4900	4500	4100	-	3900	kg										
												4000	3900	kg										

50 m															
47 m	3,5 ►	15,3	16	18	20	22	24	26	26,7	28	30	32	34	m	
42 m		8000	7600	6500	5700	5100	4600	4100	-	3800	3500	3200	2950	kg	
									4000	3800	3500	3200	2950	kg	

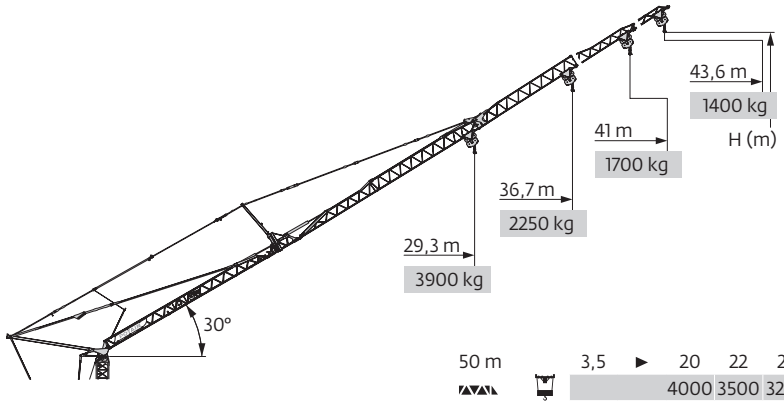

	50 m	47 m	42 m	33,5 m
H+2	-	-	-	-
	55	53,4	50,7	46,1
H+1	52	50,4	47,7	43,1
	49	47,4	44,7	40,1
H+0	46	44,4	41,7	37,1

50 m	3,5 ►	20	22	24	26	28	30	32	34	36	38	40	42	43,6	m
		4000	3500	3200	2850	2600	2350	2150	2000	1850	1700	1600	1500	1400	kg
47 m	3,5 ►	21,4	22	24	26	28	30	32	34	36	38	41	m		
		4000	3900	3500	3100	2850	2600	2400	2200	2050	1900	1700	kg		
42 m	3,5 ►	23,5	26	28	30	32	34	36,7	m						
		4000	3500	3200	2950	2700	2500	2250	kg						
33,5 m	3,5 ►	28,8	29,3	m											
		4000	3900	kg											

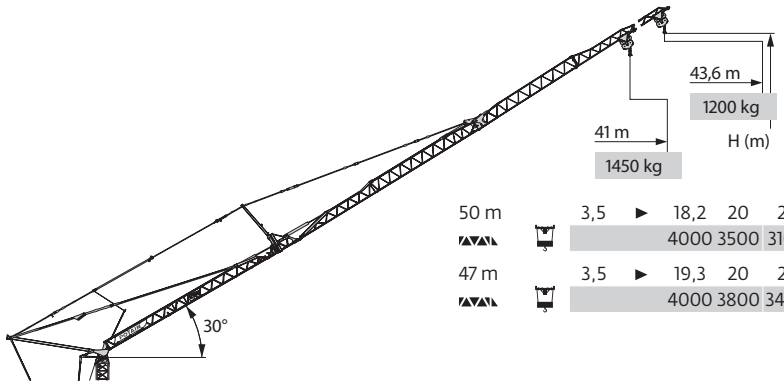

	50 m	47 m	42 m	33,5 m
H+3	61	59,4	-	-
H+2	58	56,4	-	-
	-	-	-	-

50 m	3,5 ►	18,2	20	22	24	26	28	30	32	34	36	38	40	42	43,6	m
		4000	3500	3100	2800	2500	2250	2050	1900	1750	1600	1450	1350	1250	1200	kg
47 m	3,5 ►	19,3	20	22	24	26	28	30	32	34	36	38	41	m		
		4000	3800	3400	3000	2700	2450	2250	2050	1900	1750	1600	1450	kg		

THIS CHART IS ONLY A GUIDE AND SHOULD NOT BE USED TO OPERATE THE CRANE.
The individual crane's load chart, operating instructions and other instructional plates must be read and understood prior to operating the crane

Metric mechanisms

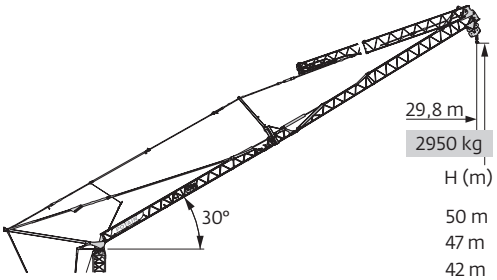

H (m)	3,5 ►	23,4	24	26	28	29,8	m
50 m							
47 m							
42 m		4000	3900	3500	3200	2950	kg

	50 m
	47 m
	42 m
H+2	46,4
H+1	43,4
	40,4
H+0	37,4

480 V - 60 Hz													hp	kW
	33 LVF 20 Optima	m/min	3,2	16	34	53	63	1,6	8	17	26,5	31,5	29,5	22
		kg	4000	4000	4000	2000	1000	8000	8000	8000	4000	2000		
	5 DVF 5	m/min	15 - 30 - 55 (4000 → 8000 kg) 15 - 30 - 70 (500 → 4000 kg) 15 - 30 - 100 (0 → 500 kg)										5,4	4
	RVF 161 Optima+	rpm	0 → 0,8										7,5	5,5
	TVF 124	m/min	25										2 x 4	2 x 3

IEC 60204-32	kVA
480 V (+6% -10%) 60 Hz	31 → 19 kVA 35 → 22 kVA

33 LVF 20 Optima

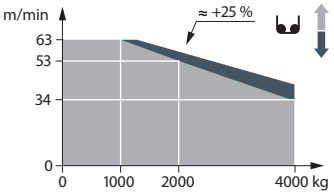

	Hoisting
	Trolleying
	Slewing
	Traveling

THIS CHART IS ONLY A GUIDE AND SHOULD NOT BE USED TO OPERATE THE CRANE.
The individual crane's load chart, operating instructions and other instructional plates must be read and understood prior to operating the crane.

Symbols glossary

Jib

Mast

Anemometer

Swing

Outrigger

Chassis

Hydraulic equipment

Controls

Electrical requirement

Ballast

Transport axle

Ballasting derrick

Reeving

Hoist

Trolley

Manitowoc Cranes

Regional headquarters

Americas
Manitowoc, Wisconsin, USA
Tel: +1 920 684 6621
Fax: +1 920 683 6277

Shady Grove, Pennsylvania, USA
Tel: +1 717 597 8121
Fax: +1 717 597 4062

Europe, Middle East, Africa
Dardilly, France
Tel: +33 (0)4 72 18 20 20
Fax: +33 (0)4 72 18 20 00

China
Shanghai, China
Tel: +86 21 6457 0066
Fax: +86 21 6457 4955

Greater Asia-Pacific
Singapore
Tel: +65 6264 1188
Fax: +65 6862 4040

Regional offices

Americas
Brazil
Alphaville
Mexico
Monterrey
Chile
Santiago

Europe, Middle East, Africa
France
Baudemont
Cergy
Decines
Germany
Langenfeld
Italy
Lainate
Netherlands
Breda
Poland
Warsaw
Portugal
Baltar
Russia
Moscow
South Africa
Johannesburg
U.A.E.
Dubai
U.K.
Buckingham

China
Beijing
Chengdu
Guangzhou
Xian

Greater Asia-Pacific
Australia
Brisbane
Melbourne
Sydney
India
Chennai
Delhi
Hyderabad
Pune
Korea
Seoul
Philippines
Makati City
Singapore

Factories

Brazil
Passo Fundo
China
TaiAn
Zhangjiagang
France
Charlieu
Moulins
Germany
Wilhelmshaven
India
Pune
Italy
Niella Tanaro
Portugal
Baltar
Fânzeres
USA
Manitowoc
Port Washington
Shady Grove

This document is non-contractual. Constant improvement and engineering progress make it necessary that we reserve the right to make specification, equipment, and price changes without notice. Illustrations shown may include optional equipment and accessories and may not include all standard equipment.

©2014 Manitowoc
Form No. Igo T 130 PG
Part No. 11-001 0114